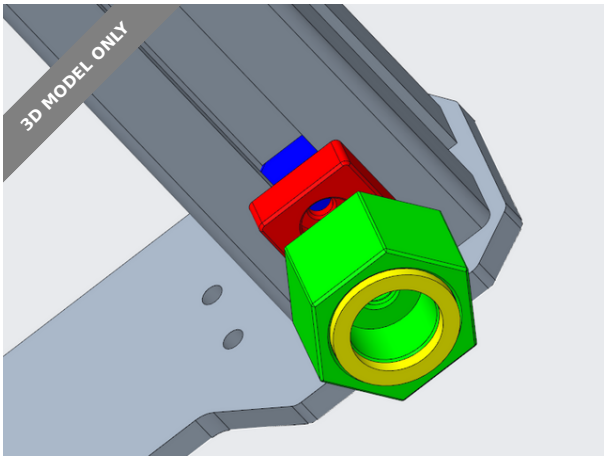

MK3S+ Adjustable Feet

M Mouldy_cheesd

VIEW IN BROWSER

updated 3. 8. 2022 | published 3. 8. 2022

Summary

The paver I bought wasn't flat so I needed feet that could vary in height to account for the unevenness.

Hobby & Makers > Mechanical Parts

Tags: 3dprinter 3dprinterfeet feet printerfeet

These will print with the M6 thread however the M3 on the clamp plate will need to be tapped. I printed with prusament PETG with 0.2H settings and the M6 fit snug however you may need to tap or run the screw through it.

Required Items per foot

M6 x 20 Cap Head Screw

M6 Washer

2 x M3 x 10 Cap Head Screws

2 x M3 Washer

Double sided tape (For rubber pad)

I printed 8 off sets and put 2 on each extrusion.

Tighten the M6 equipment into the Hex Stud and tighten sufficiently to keep it in place. I went for 2.5Nm but play it by ear. If the thread feels like it'll strip don't go as tight.

Stick the rubber pad on into the recess above the counterbore

Pre-assemble the T Nut Profile and Clamp Plate but keep it loose so you can slide into the extrusion.

Slide one clamp assembly to each end of the extrusion so it is snug against the plates and then tighten. I went to 0.5Nm but be very careful as it can strip easily.

Tighten the hex stud with M6 screw into the plates on the printer all the way but don't go crazy as you'll need to slacken a few off depending on your uneven surface.

Place the printer

Loosen which ever foot is not touching

Done

Model files

Pet_G 3 files

clamp_plate.stl

hex_stud.stl

t_nut_profile.stl

Flexible Material 1 file

rubber_pad.stl

License

This work is licensed under a
Creative Commons (4.0 International License)

Attribution—Noncommercial—No Derivatives

✖ | Sharing without ATTRIBUTION
✖ | Remix Culture allowed
✖ | Commercial Use
✖ | Free Cultural Works
✖ | Meets Open Definition