The1987Lite - A Handwired 65% revision of The1987 TKL with OLED and RGB!

revere521

VIEW IN BROWSER

updated 11. 11. 2022 | published 11. 11. 2022

Summary

The1987Lite - A Handwired 65% revision of The1987 TKL with OLED and RGB!

Gadgets > Computers

Tags: rgb keyboard mechanicalkeyboard oleddisplay

Since my first published keybboard was The1987 (https://www.printables.com/model/299777-the1987-a-modular-retro-inspired-87-key-mechanical) and it's fairly popular, and its designed around the Phantom circuit board and Teensy 2.0, which are no longer available, i felt it was time to take the design concept - and make something new! good for all of us right?

I wanted to recreate this keyboard that pulled from 80's design styles - especially consumer electronics, PCs and video game systems. I still love the 80's grey everything that my 12 year old self drooled over and i needed to recapture it again. So like the designers in the 90's - i took the successful 80's design, made it smaller and added some lighting and gadetry and called it the something something Lite! Exciting!

the name was originally a play on the TKL (87 keys) and the 1980's ... but whats in a name...its the though that counts...not shamelessly playing on the popularity off a thing while loosing a little of the meaning right?

i don't know, let me know what you think in the comments

Parts list:

- 67x Cherry MX style mechanical key switches
- A set of Keycaps - I used these awesome videoarcade themed ones https://www.amazon.com/dp/B08T9BJ34H?psc=1&ref=ppx_yo2ov_dt_b_product_details
- I had a Proton-C available, so the firmware is there if you have one, as well as a bottom case
- Or A Keeb.io Elite-C https://keeb.io/products/elite-c-low-profile-version-usb-c-pro-micro-replacement-atmega32u4 or Elite-Pi https://keeb.io/products/elite-pi-usb-c-pro-micro-replacement-rp2040
- 18x Ws2812B RGB LED Modules https://www.amazon.com/dp/B01DC0J3UM?psc=1&ref=ppx_yo2ov_dt_b_product_details (way more than enough light, and no power issues)
- 1x 0.91 Inch I2C OLED screen https://www.amazon.com/dp/B08L7QW7SR?psc=1&ref=ppx_yo2ov_dt_b_product_details
- 67x IN4148 diodes - i keep these around https://www.amazon.com/gp/product/B079KJ91JZ/ref=ppx_yo_dt_b_search_asin_title?ie=UTF8&psc=1
- 8x M3x12mm pan head machine screws (to assemble the case)
- 2x M3x6mm pan head machine screws (to attach the feet)
- 8x M3x4x5 Brass threaded inserts (to heat insert into the TOP PLATE screw holes)
- Clear or White filament for the bottom of the case i used this
- Various wire, soldier, etc. etc.

Print Settings

Anycubic Large Size Chiron

Rafts: No

Supports: Yes

Resolution: 0.2 mm should be fine

Infill: i used 15%

Filament brand: Hatchbox Gray PLA and Clear for the first 4mm (I used Sunulu Clear PLA)

Notes:

Print the Bottom plate to about 4mm in clear and switch to your filament from clear to a the Grey or a color like i did.

Post-Printing

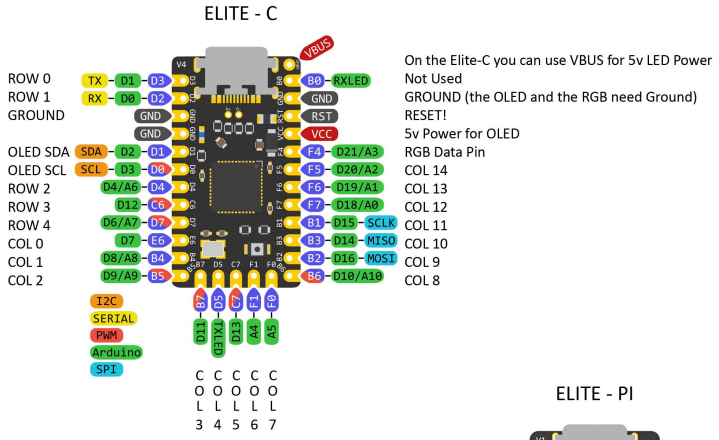

The COL and ROW numbers correspond with the labelling on the column and row wiring diagram

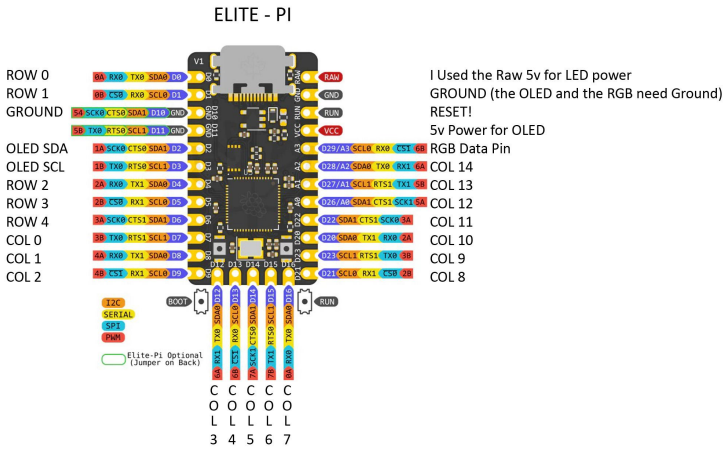

The Column to Row wiring diagram is reversed, so it appears just as it would when you have the back of the key plate facing you during soldering.

Then the Column and Row numbering in that image correspond to the pin assignments in the Elite-C and Elite-Pi pin-outs

RGB and OLED:

For the OLED, i had to bend the pins slightly to add some clearance inside the case, YMMV
The OLED Displays Layer Info,, Lock Keys (CAP , SCR, and NUM) and the RGB Mode, Color Saturation and Color Value numbers

For the RGB Buttons, i glued the mount discs and then wired and hot-glued the buttons into place. The firmware provides for 18 (you can use fewer if you choose, but some animations may have a gap). I paced 8 across the front edge, 3 on each side, and 4 across the back.

Key Map:

The Key Map is essentially the same as TheAlternate and match the keycaps in the photos - these are the function keys:

Fn+Q = resets the keyboard (no bootloader)
Fn+R = Resets to bootloader for flashing
Fn+the number row = F1 through F12 (Minus and Equals are F11 and F12)
Fn+P = Print Screen
Fn+[= Scroll Lock
Fn+] = Pause
Fn+Del = Mute
Fn+Home = End
Fn+Right Arrow = Insert
Fn+PgUp = Volume Up
Fn+PgDn = Volume Down
Fn+Caps Lock = Cycles RGB Modes Forward (Adding Shift Reverses)
Fn+A = Cycles RGB Hue Increase (Adding Shift Decreases) - this only applies to some modes
Fn+S = Cycles RGB Saturation Increase (Adding Shift Decreases)
Fn+D = Cycles RGB Value Increase (Adding Shift Decreases)
FN+F = Toggles RGB On and Off

Model files

the1987lite-elitepi-1piece-topplate-v134.stl

the1987lite-elitepi-2piece-topplate-right-v134.stl

the1987lite-elitepi-2piece-topplate-left-v134.stl

the1987lite-elitepi-1piece-bottom-v134.stl

the1987lite-elitepi-2piece-bottom-right-v134.stl

the1987lite-elitepi-2piece-bottom-left-v134.stl

the1987lite-protonc-1piece-bottom-v133.stl

the1987lite-protonc-2piece-bottom-right-v133.stl

the1987lite-protonc-2piece-bottom-left-v133.stl

the1987lite-elitepi-display-cover-v134.stl

the1987lite-elitepi-foot-v134.stl

the1987lite-elitepi-led-mount-v134.stl

Other files

firmware.zip

Firmware for the Proton-C, Elite-C and Elite-Pi

License

This work is licensed under a
Creative Commons (4.0 International License)

Attribution—Noncommercial—Share Alike

✖ | Sharing without ATTRIBUTION
✔ | Remix Culture allowed
✖ | Commercial Use
✖ | Free Cultural Works
✖ | Meets Open Definition