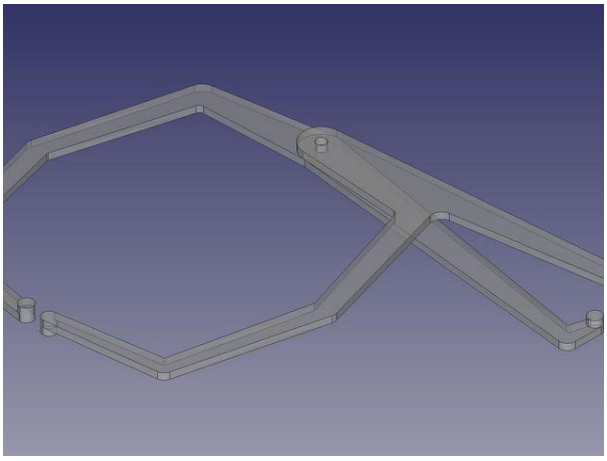

90 degree outside caliper

Simply Ceem

VIEW IN BROWSER

updated 28. 11. 2022 | published 28. 11. 2022

Summary

Measure awkward spaces behind things that poke out using only your basic ruler or regular vernier calipers :)

0.74 hrs	1 pcs	0.20 mm	0.40 mm	PLA	9 g	Prusa MK3/S/S+

Hobby & Makers > Tools

Tags: tool measure ruler quick handy outside external handtools handtool m3 caliper clearance lasercut measuring cncrouter calipers measurement vernier verniercalipers behind

Both the large and straight jaws move together and always have the same gap, allowing you to use a ruler or vernier calipers to make the measurement of some awkward places without guessing.

I designed these to measure the thickness of my door panel with a cat flap in it; the cat flap is very thick and deep, so regular vernier jaws did not do the job

You could scale this up to use other hardware, default is a 3mm pivot pin:
105.8% = 1/8" (3.175mm)
133% = 4mm
166% = 5mm

I have provided a .step file if you would like to remix this tool (add measurement indexes, a locking mechanism or a spring perhaps?). Designed using the fantastic FreeCAD v.0.20.1

Added a ready to gcode file generated with PrusaSlicer for Prusa MK3's with PLA filament

Model files

caliper-y-piece.stl

caliper-f-piece.stl

clearance_caliper.step

Print files

90-degree-outside-caliper_02mm_pla_mk3s_44m.gcode

PLA 0.40 mm 0.20 mm 0.74 hrs 9 g Prusa MK3/S/S+

License

This work is licensed under a
Creative Commons (4.0 International License)

Attribution

✖ | Sharing without ATTRIBUTION
✔ | Remix Culture allowed
✔ | Commercial Use
✔ | Free Cultural Works
✔ | Meets Open Definition