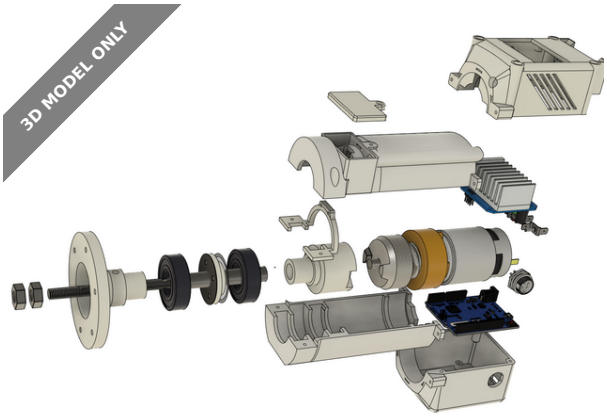

Force feedback steering wheel using a cordless drill

jasonwinfieldnz

VIEW IN BROWSER

updated 1. 8. 2023 | published 1. 8. 2023

Summary

This is an alpha version of a force feedback steering wheel using parts from a cordless drill and inkjet printer.

Gadgets > Video Games

Using a cordless impact driver (assume a Whitelabel no-name brand) and a Canon printer (MB2160) I designed this force feedback steering wheel. You will need the following

1. Impact driver I have attached an STL for you to compare measurements.
2. MB2160 print although you could probably use any inkjet printer
3. 2 x ballbearing 20x42x8
4. Arduino Leonardo (UNO will not work)
5. BTS7960 H-Bridge
6. A power source (I used a drill battery)
7. 8mm threaded rod and 2 x nuts
8. 2 x 4mm roll pins
9. A steering wheel with the standard stud pattern
10. Firmware found here: https://github.com/ranenbg/Arduino-FFB-wheel
11. (opt) 5 pin connector (see video)

See below for the progress so far.

As the project progresses I will be adding extra parts like paddle shifters and pedals.

Model files

frontlower.stl

bossmount.stl

coupling.stl

frontupper.stl

sensorcover.stl

sensormount.stl

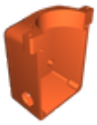

lowerrear.stl

reartop.stl

driveunit.stl

This is just for checking measurements

License

This work is licensed under a
Creative Commons (4.0 International License)

Attribution-NonCommercial

✖ | Sharing without ATTRIBUTION
✔ | Remix Culture allowed
✖ | Commercial Use
✖ | Free Cultural Works
✖ | Meets Open Definition