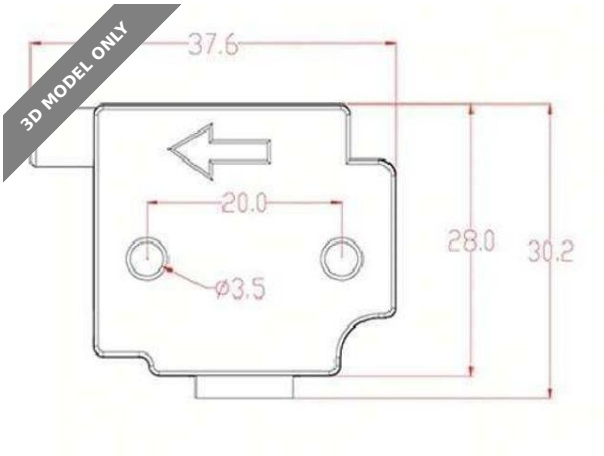

Simple Runout Filament Sensor Base

Geniezito

VIEW IN BROWSER

updated 12. 4. 2022 | published 28. 1. 2021

Summary

Soporte para sensor de rotura de filamento.

3D Printers > 3D Printers - Upgrades

Tags: filament filamentrunoutsens filamentrunout lowfilamentsensor runoutsensor ender5pro crealityender5pro ender5upgrades

Soporte para sensor de rotura de filamento. se fija a la estructura de la impresora a presión... los pines plasticos se colocan por inserción en el sensor, y en la base. puede usar pegamento adicional si lo desea.

ENGLISH:
Support for filament break sensor. it is fixed to the frame of the printer by pressure ... the plastic pins are placed by insertion in the sensor, and in the base. you can use additional glue if you like.

Print instructions Category: 3D Printer Accessories Summary

Soporte para sensor de rotura de filamento. se fija a la estructura de la impresora a presión... los pines plasticos se colocan por inserción en el sensor, y en la base. puede usar pegamento adicional si lo desea.

ENGLISH:
Support for filament break sensor. it is fixed to the frame of the printer by pressure ... the plastic pins are placed by insertion in the sensor, and in the base. you can use additional glue if you like.

Print Settings

Printer Brand:

Creality

Printer:

Ender 5

Rafts:

No

Supports:

No

Resolution:

0.2

Infill:

20%

Filament:
bimek3d PLA Black

Notes:

Diseñado para este tipo de sensor:
https://www.amazon.com/gp/product/B07SFFXC9C/ref=ppx_yo_dt_b_asin_title_o01_s00?ie=UTF8&psc=1

Los cilindros se pueden imprimir en 0.12 para mejor homogeneidad.
el archivo incluye un solo soporte, por tanto, debe multiplicarlo.

La base puede imprimirse en 0.2
La base debe girarse para evitar usar soportes. aun asi, puede activarlos para las pestañas de sujeción.

se sugiere colocar primero la base a la estructura de la impresora, y luego colocar el sensor e insertar los pines. puede ser necesario martillarlos suavemente para que ingresen

ENGLISH:
Designed for this kind of sensors:
https://www.amazon.com/gp/product/B07SFFXC9C/ref=ppx_yo_dt_b_asin_title_o01_s00?ie=UTF8&psc=1

The cylinders can be printed at 0.12 for better homogeneity.
the file includes only one medium, therefore you must multiply it.

The base can be printed in 0.2
The base must be rotated to avoid using supports. you can still turn them on for the holding tabs.

It is suggested to attach the base to the printer frame first, and then attach the sensor and insert the pins. may need to be tapped gently to enter

Model files

sensor_fill_base_p.stl

sensor_fill_base_b.stl

Find source .stl files on Thingiverse.com

License

This work is licensed under a
Creative Commons (4.0 International License)

Attribution

✖ | Sharing without ATTRIBUTION
✔ | Remix Culture allowed
✔ | Commercial Use
✔ | Free Cultural Works
✔ | Meets Open Definition