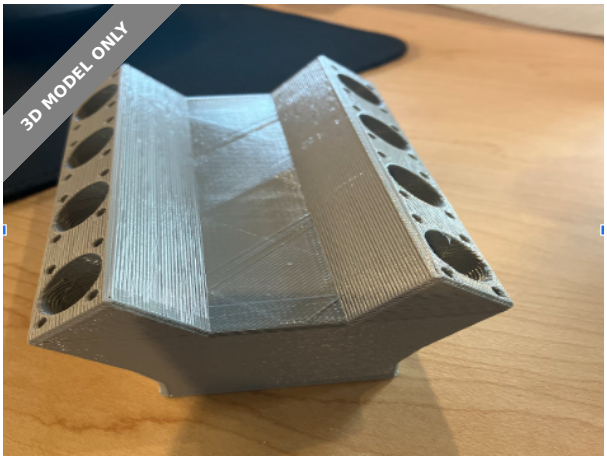

LANS V8 Engine & Manual Gearbox

I Imostrom

VIEW IN BROWSER

updated 1. 7. 2024 | published 20. 6. 2024

Summary

Office supplies that are vehicle themed - used to help with your office supply needs and also look cool

Art & Design > Other Art & Designs

The theme for our final project was vehicle parts, so the objects created were a V8 Engine designed to hold pencils/pens and other things like erasers, and a Manual Gearbox with slots big enough to fit a USB inside.

I worked on these things while my partner, Nathan Quility Zielinski, designed a stack of Three Tires designed to also hold objects like pencils and such, and a Turbo Engine, made to hold specifically writing utensils. All of the following designs were made to fit a constraint box of 5x10 cm.

Down below are the steps used to create the V8 Engine Holder, kept track on a step-by-step document:

1. On the Right Plane, draw the sketch and draw it according to scale to fit a 5x10cm rectangle, then go to the boss extrude command to extrude the object by 6 cm.

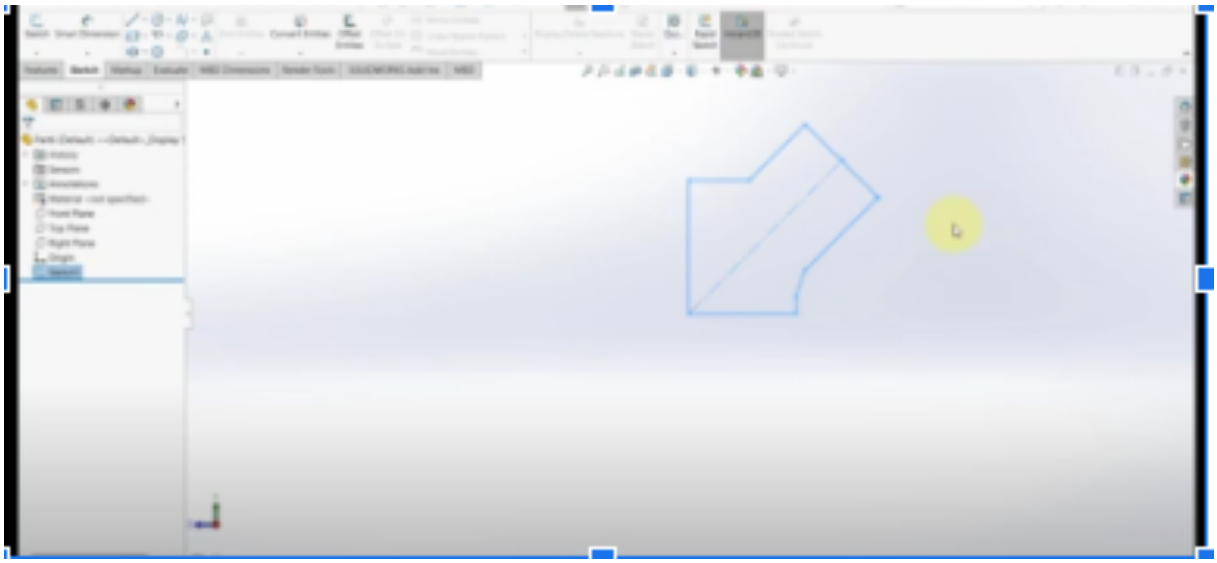

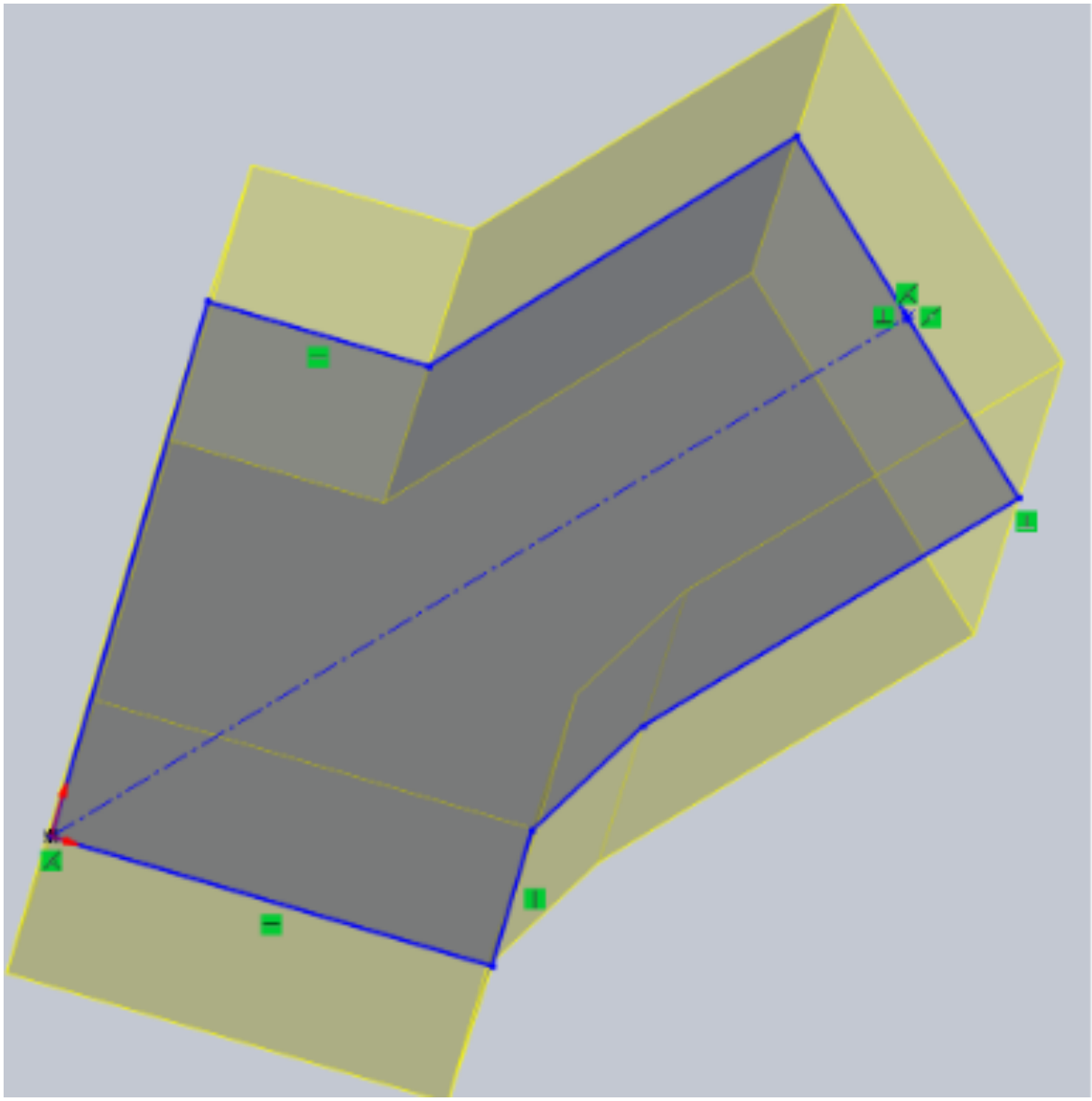

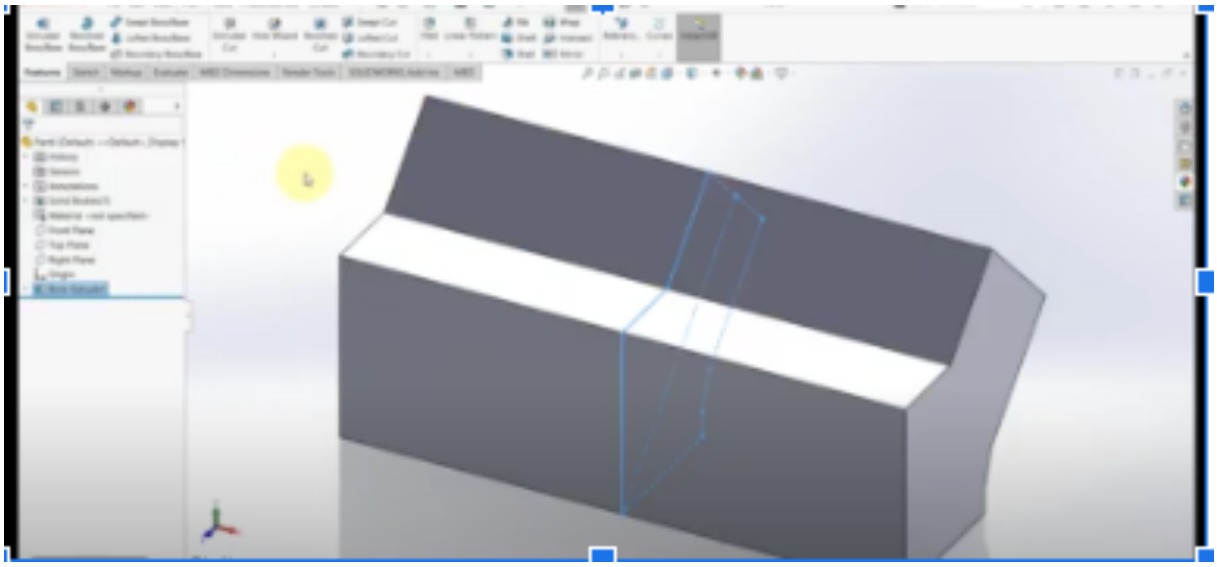

2. First draw a construction line down the middle of the long side, then draw a circle 0.65 cm from the edge and 0.85 cm wide, use the linear pattern tool to create 3 more instances, then extrude cut these circles 2 cm.

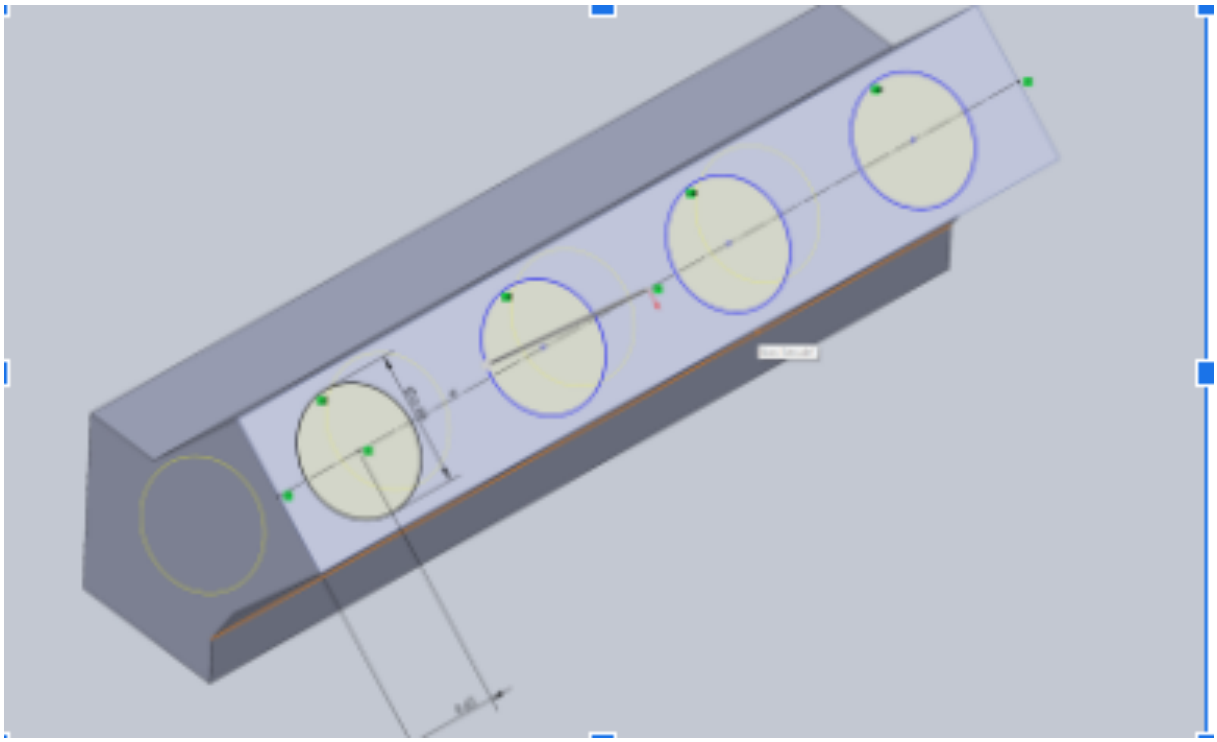

3. Draw 4 circles around each big cylinder and make them 0.08 cm long, then extrude cut them 1 cm.

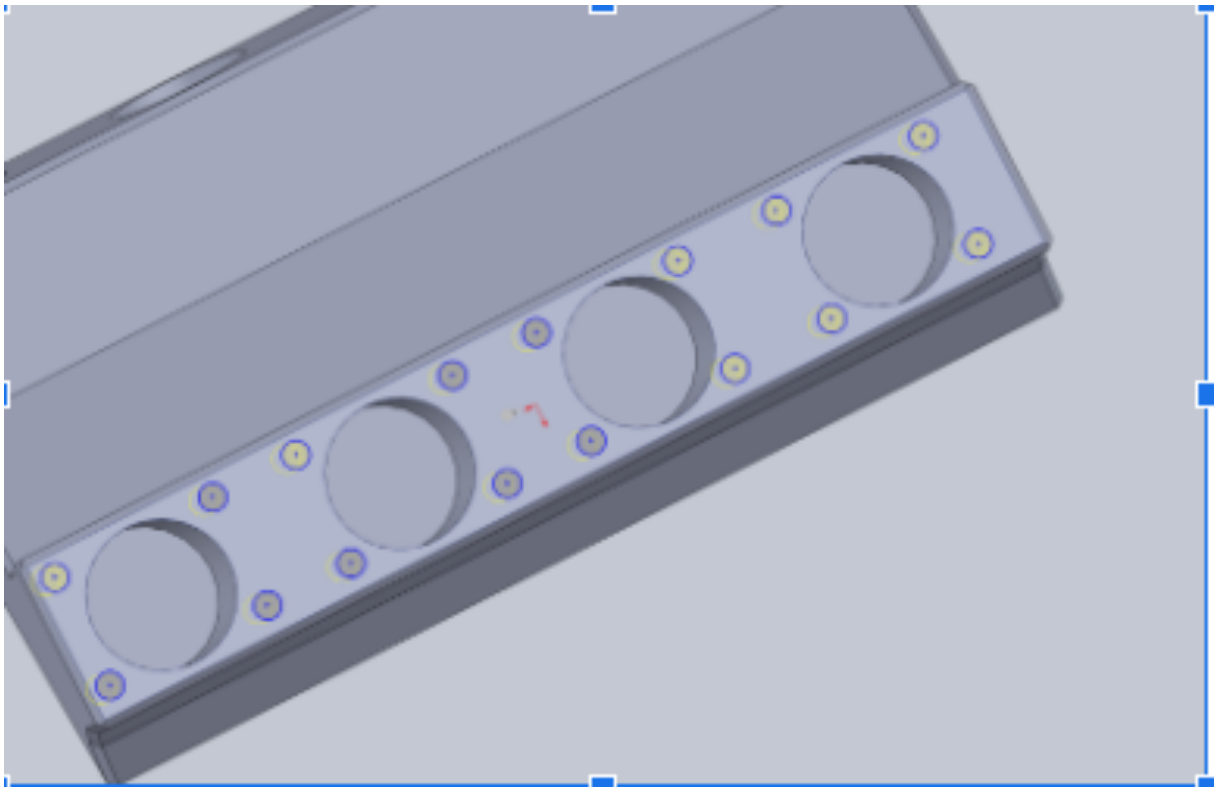

4. Create a vertical axis line off the horizontal edge, and mirror the engine off of that line.

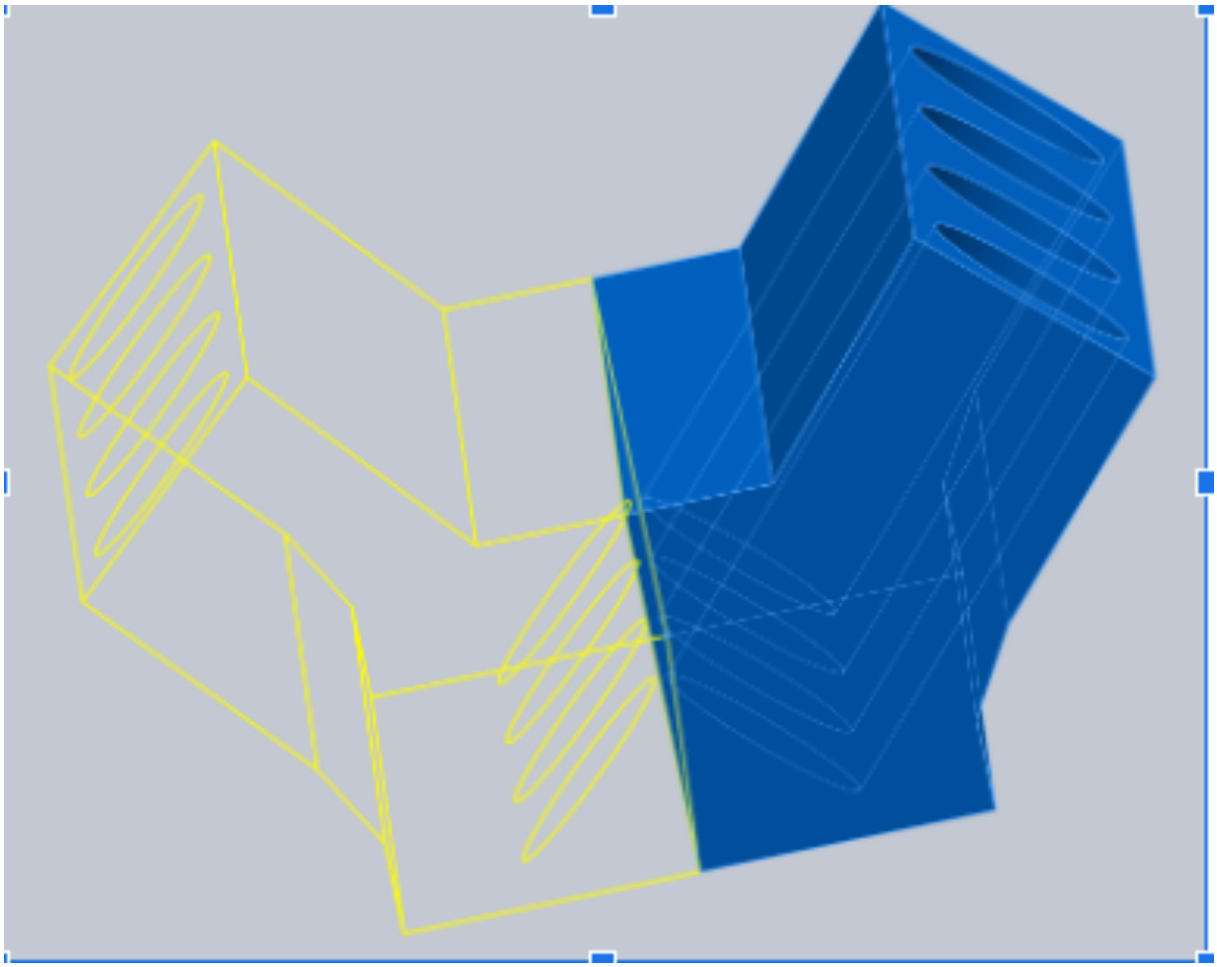

5. Using the Chamfers tool, input little Chamfers along the sides of the engine(just not on the bottom and the parts that aren’t highlighted), and make them 0.05 cm at a 45 degree angle.

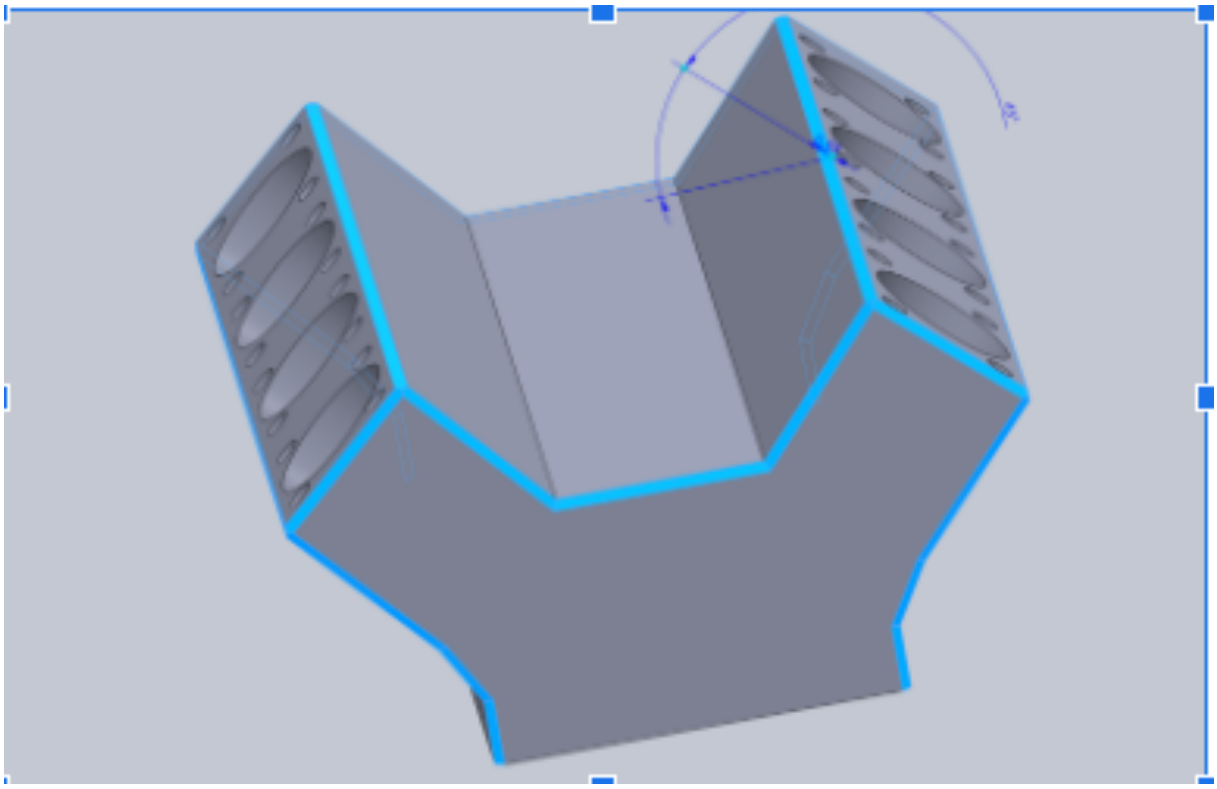

6. Final Product:

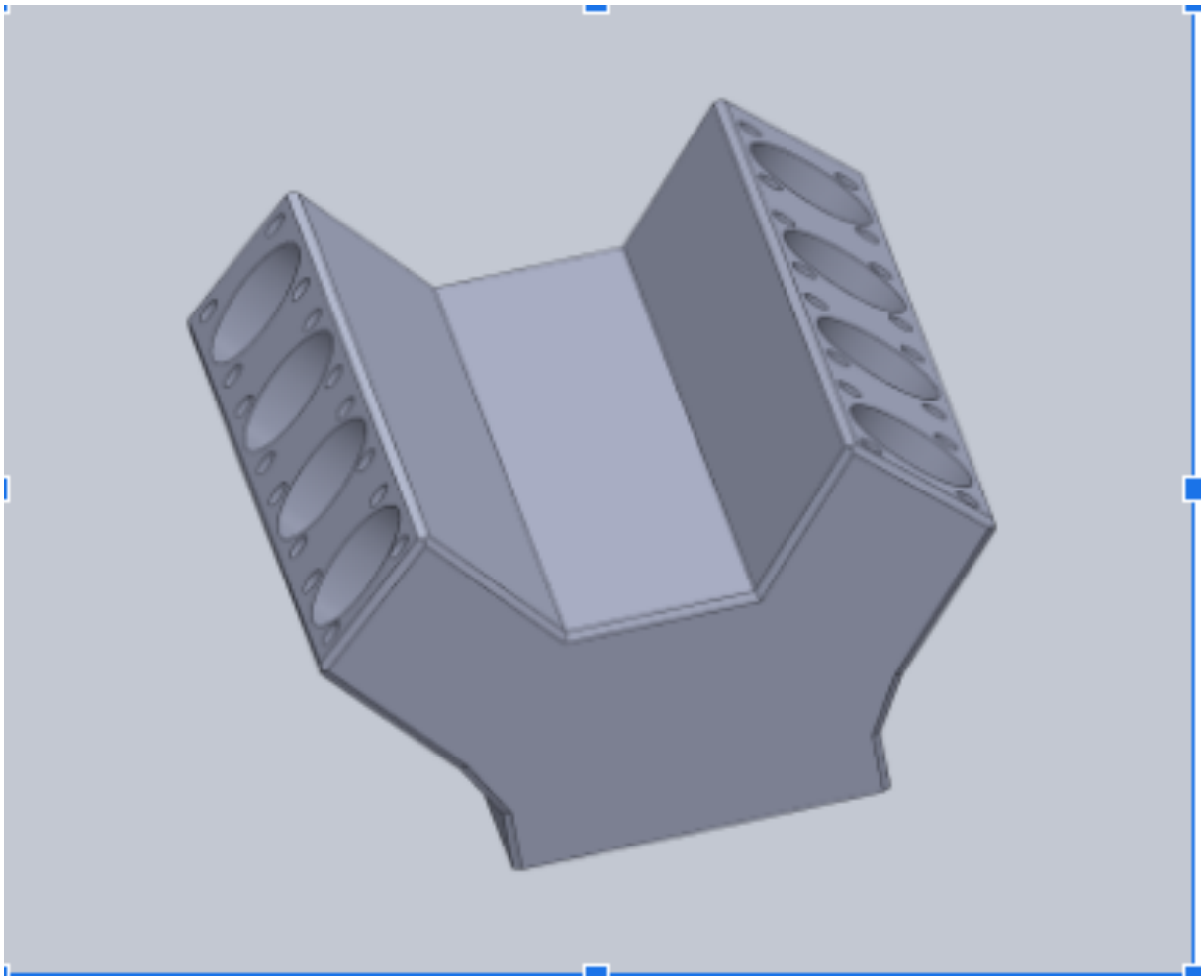

Down below are the steps used to create the Manual Gearbox, also kept track on a step-by-step document:

1. On the Top Plane, draw a circle with a radius of 6 inches and reverse offset that by 1 cm, within that circle, draw the middle design with the measurements shown(disregard the center circle) and extrude cut

that by 0.8 cm, the draw the center circle with a radius of 0.8 cm.

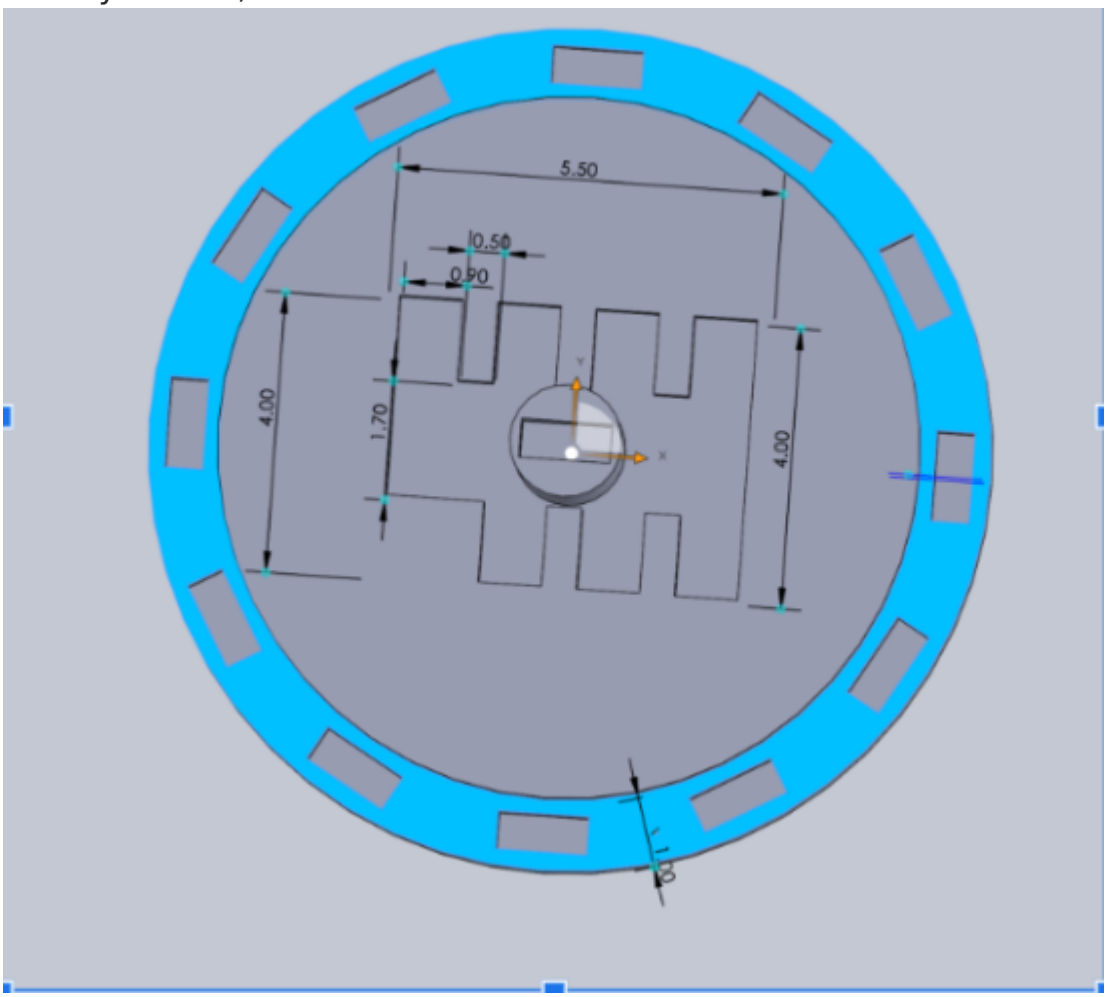

2. Extrude the outer circle by 1.5 cm, the inner circle by 2.5 cm, and the center circle by 5.5 cm.

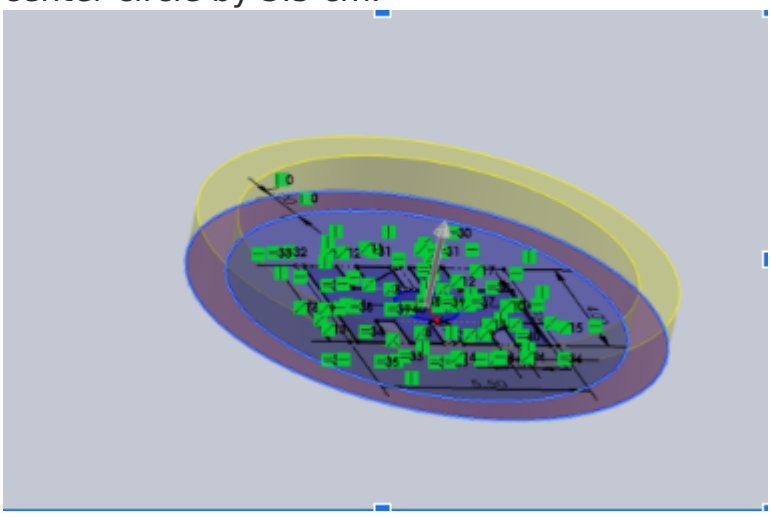

3. At the top of the outer circle, use the center rectangle tool to create a rectangle 0.55 cm by 1.3 cm, wide enough for the USB to fit in with some wiggle room if necessary, then cut the rectangle by 1.2 cm(you

will also need to do one on the center circle as well).

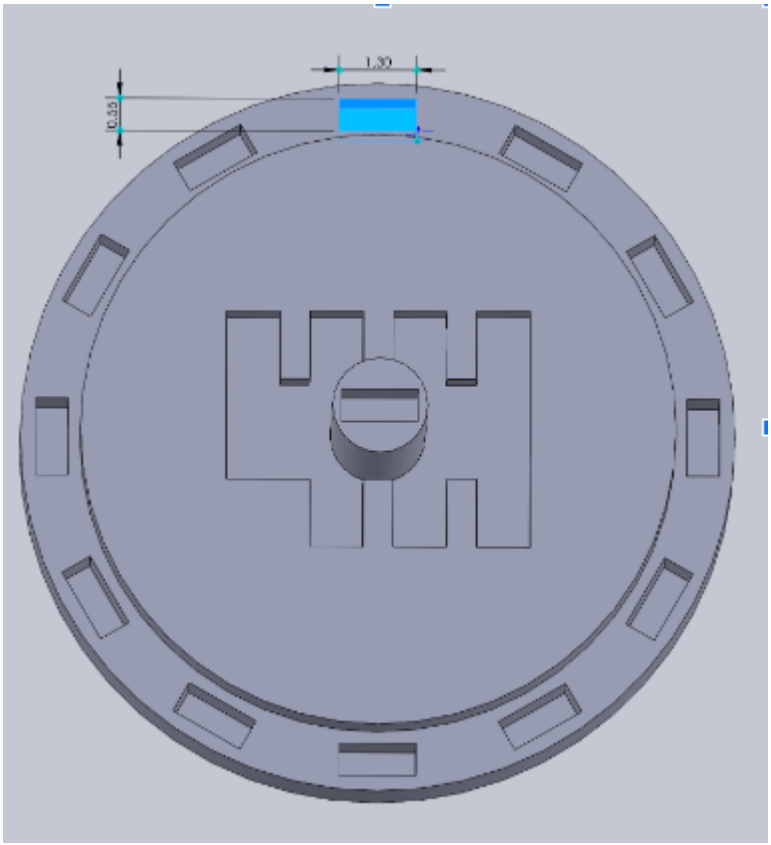

4. Use the circular pattern tool to create 11 more instances on the outer circle, draw a vertical construction line from the origin, and make that line the revolved axis point.

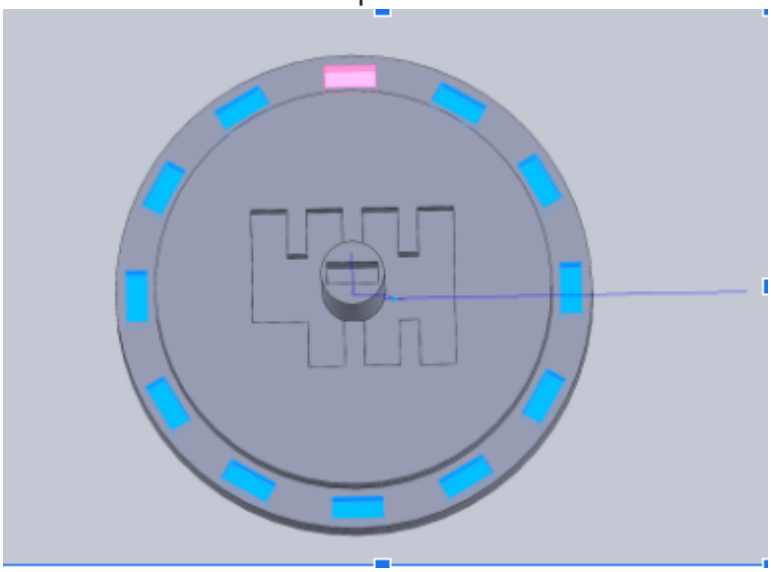

5.

Final Product: 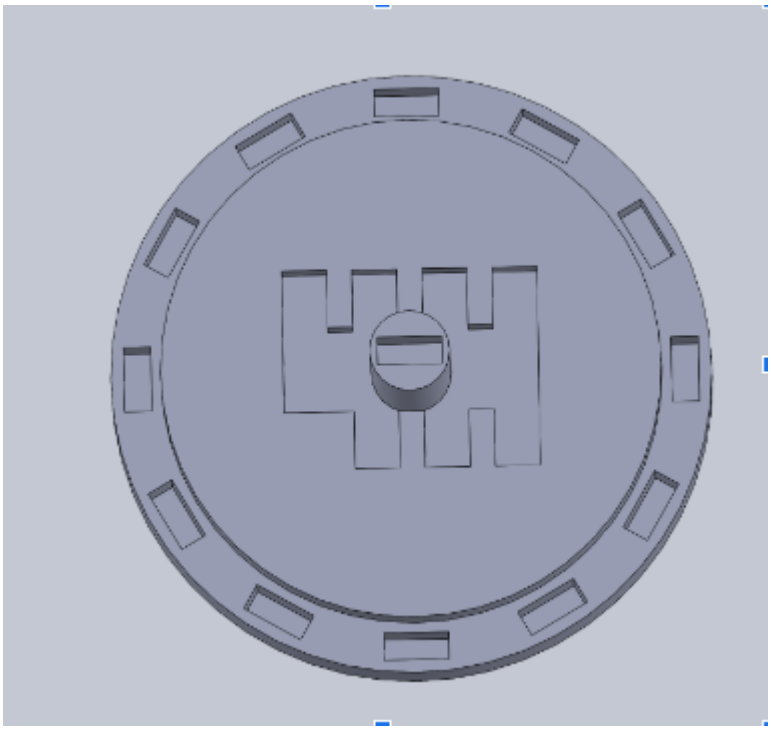

Model files

lans-manual-gearbox.3mf

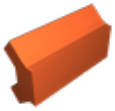

v8-engine-block.3mf

lans-turbo.stl

lans-tire.3mf

License

This work is licensed under a
Creative Commons (4.0 International License)

Attribution-NonCommercial

✖ | Sharing without ATTRIBUTION
✔ | Remix Culture allowed
✖ | Commercial Use
✖ | Free Cultural Works
✖ | Meets Open Definition