Front light bracket for Racktime TopIt front rack

a aiber

VIEW IN BROWSER

updated 30. 6. 2024 | published 30. 6. 2024

Summary

replacement bracket, designed for an Aventon front light but could work with other dynamo mounts

Sports & Outdoor > Outdoor Sports

Tags: light mount front bracket rack bicycle bike racktime topit

Motivation

- stock, the Aventon Level.2 front light mounts to the stem
- the handlebar area gets cluttered quickly
- I first tried moving it to the suspension fork arch, but it would get blocked by front panniers
- then I tried simply extending it below the stem
- however, this would still be blocked whenever I have my pogies installed
- I moved the mount backwards on the stem with my old extension bar, but it would simply pitch forward under its own weight, & it still would get blocked by my pogies

- I disregarded this solution for a while, thinking that I wanted to keep the ability to dismount the front rack when I didn't need it
    - but in practice, I never dismounted the front rack for months, so it might as well be considered a permanent fixture of the bike now
    - this position isn't occluded by luggage on the front or sides of the pannier & is independent of my pogies
    - this position may get soaked by rain & road debris from the tire, so I simply hot glue/potted a strain relief area around where the wires enter the case of the light

Commercial product

- sheet metal construction
- note the actual light mount itself projects only a small amount
    - this is problematic since your light, like mine, may have near 0 range to adjust nod angle

Rev 1

- I underestimated how much range I would need
- out of laziness, I didn't print R2 & instead made up the difference with printed M5 spacers & a longer screw to avoid interfering the light with the bracket

- without the spacers, the light points barely in front of the bike
  -
-

-

Rev 2

- the front rack naturally pitches about 45 deg downward from horizontal, so we need to counteract this

- ASM to verify pitch angle adjustment range before interference with a mockup of the Aventon front light – it can nearly balance out to level
    - 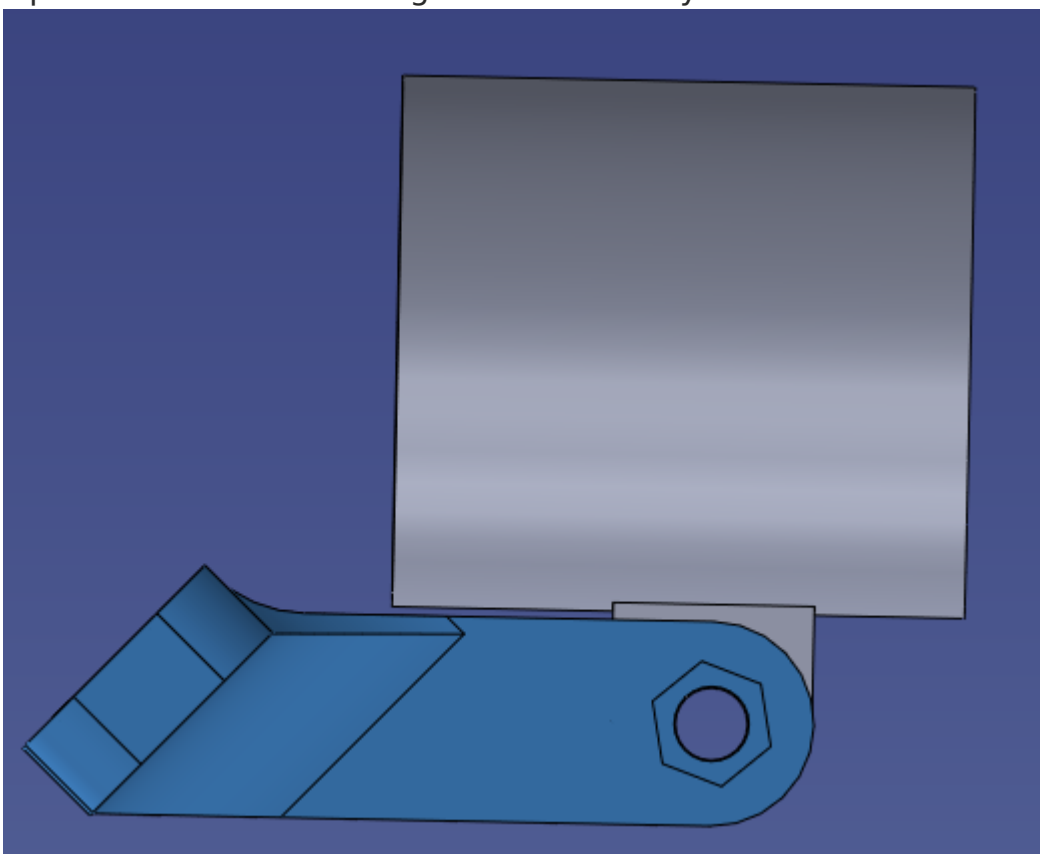
- 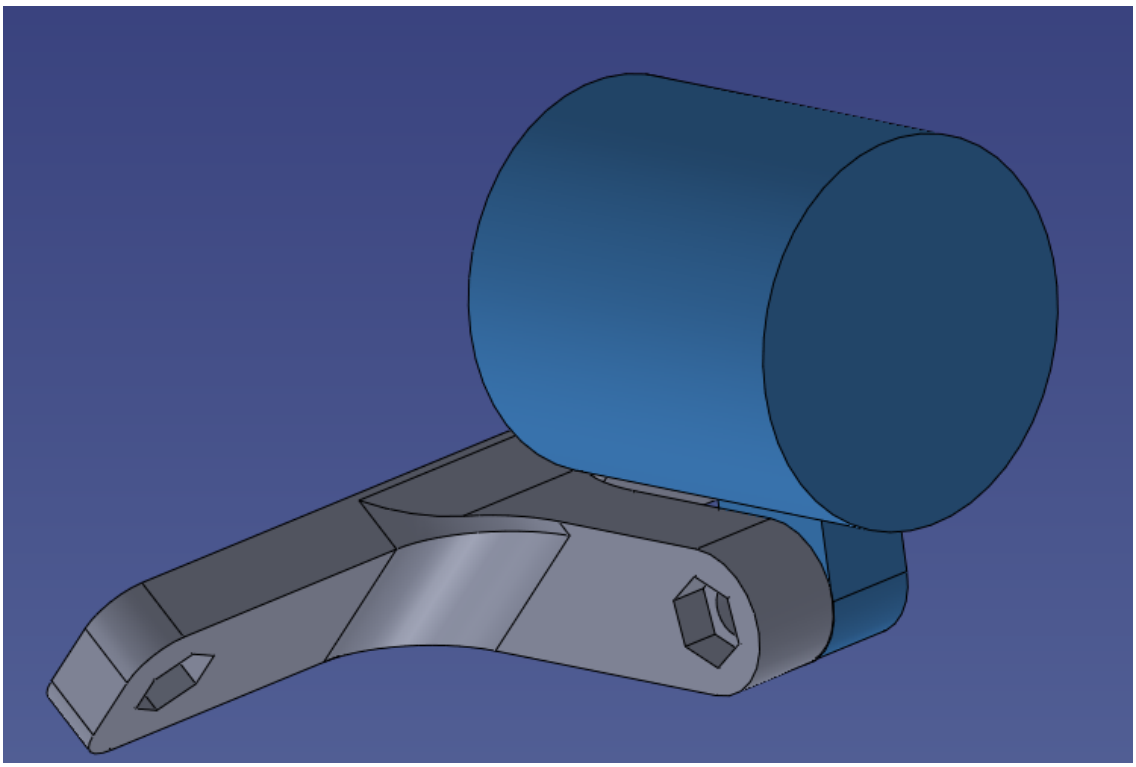

- 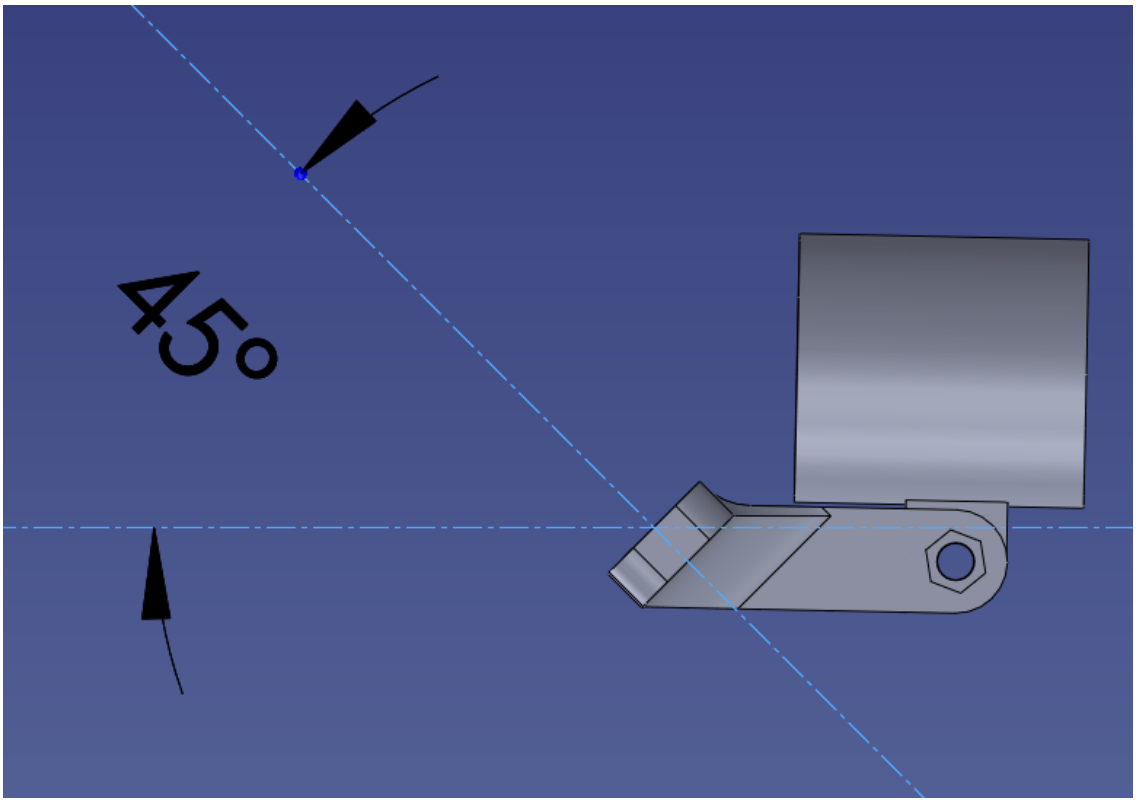

Hardware required for R1 & R2

- qty 3 M5 locknut
  - 8 mm across flats, 5 mm tall
- qty 2 M5 x 10-14 mm CBORE or button head
  - to attach bracket to rack
- qty 1 M5 x 20-40 mm
  - to attach light to bracket

Printing

- neither of R1, R2 require supports

Model files

REV 1 3 files

light-mount-front-rack_r1.sldprt

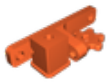

2024-06-23-ums3_light-mount-front-rack_r1_1_v.3mf

light-mount-front-rack_r1_1_v.stl

REV 2 7 files

light-mount-front-rack_r2.sldprt

front-light-aventon.sldprt

light-mount-front-rack_r2.sldprt

front-light-aventon.sldprt

asm-test_r2.sldasm

asm-test_r2.sldasm

light-mount-front-rack_r2_2_v.stl

License

This work is licensed under a
Creative Commons (4.0 International License)

Attribution-NonCommercial

✖ | Sharing without ATTRIBUTION
✔ | Remix Culture allowed
✖ | Commercial Use
✖ | Free Cultural Works
✖ | Meets Open Definition