Reversible Ratcheting Pocket Hex Driver w/ Bit Storage

CheezyLabs

VIEW IN BROWSER

updated 19. 7. 2024 | published 19. 7. 2024

Summary

Prints in <1 hour! Great for fidgeting!

Hobby & Makers > Tools

Tags: tool mini fidget socket hex pocket screwdriver handtool hexbit driver ratcheting

UPDATE: When not in use, put the switch in the straight down position so it's not pressing against either side of the spring. I have found that over time it deforms it and loses its tension.

There are some great ratcheting drivers here on Printables, but I wanted to design one myself that world be reversible and as small as possible for daily carry. Also great for fidgeting!

Design

The reversing mechanism was designed with PLA's flexibility in mind. Upon assembling, the spring engages both sides of the drive gear. When pivoting the selector between tightening (+) and loosening (-), it pushes and disengages the spring on the opposite side. PLA as the spring material

seems to work well. I have not tried other materials, although printing in PETG is probably the way to go.

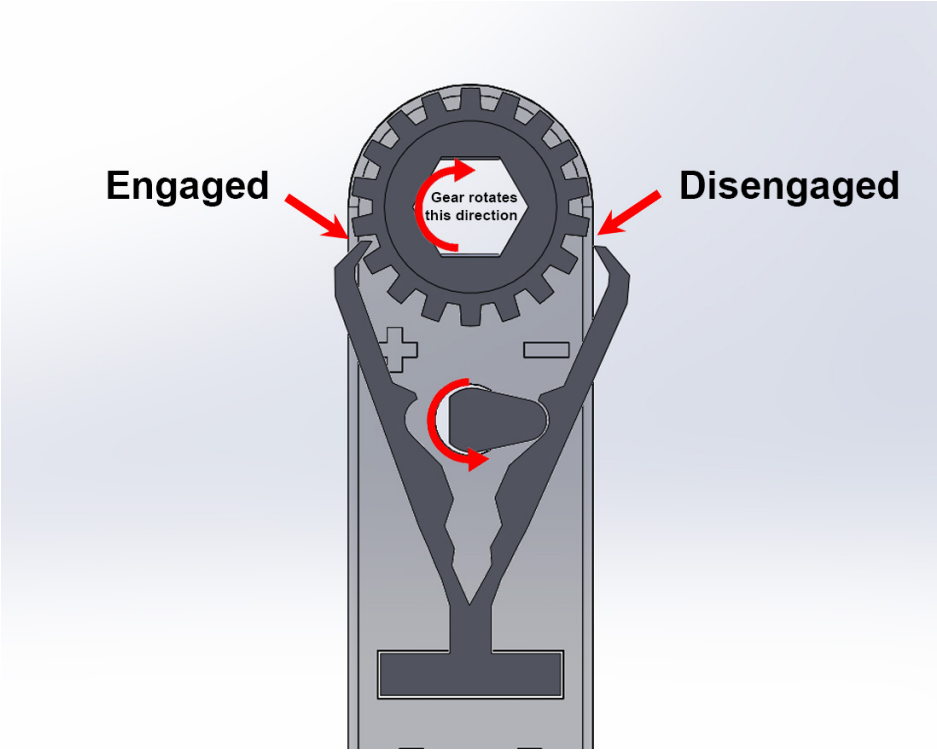

Maximum torque in early versions were quite low, but greatly improved with a beefier and thicker spring design. I do not have exact numbers.

A few prototype designs

Stores up to 2 bits inside the handle. Secures with a storage lid. I have plans to make some sort of hinge so the door isn't loose and easily lost.

There's a lip inside the bit holder, so pushing the bit all the way in should secure it tightly. Another option is to add a small 6x3mm round magnet inside (i got mine here), just secure with a bit of super glue. With the magnet inside, it lifts the bit just enough so the lip doesn't engage (its no longer needed if there's a magnet) and there's still plenty of space for the bit to sit inside.

Printing

Printed on the X1-C with Bambu PLA-CF in default settings which gave a great finish and fitment. Be sure to use auto extrusion calibration. Your bed height/elephants foot can easily cause fitment issues.

Use at least 4 walls, 20% infill. Pay attention to part orientation.

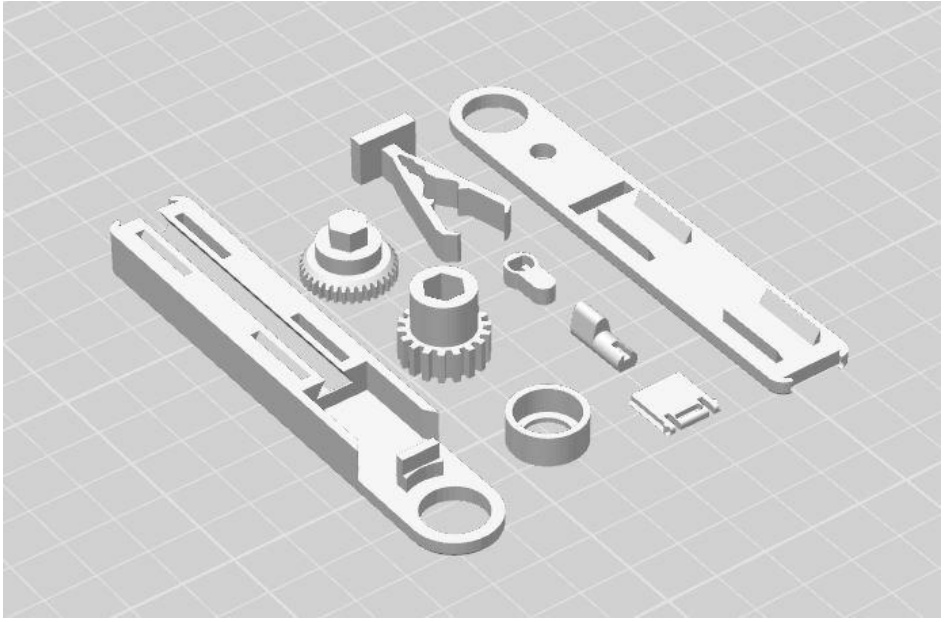

Assembly

Quick assembly instructions. For more details, check the Assembly Instructions.pdf

I'm not the biggest fan of using glue, but it seemed necessary given how small some of the parts were.

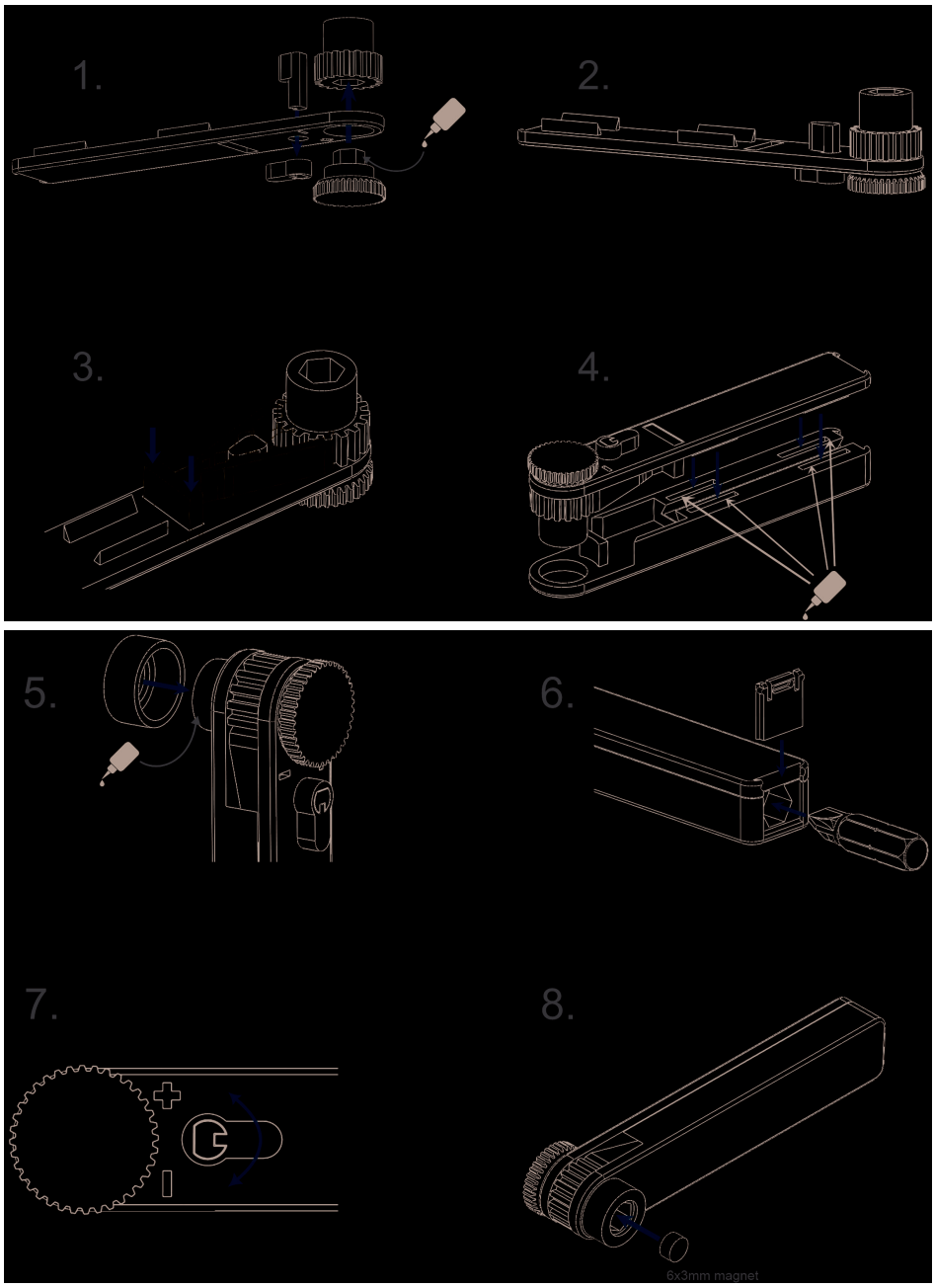

If you have questions/comments please be sure to let me know!

Check out my very own filament on Amazon

If you'd like to support me further check out my Patreon

Happy printing!

Model files

Hex Bit Driver 9 files

drive-retainer.stl

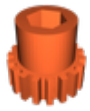

drive-gear.stl

thumb-screw.stl

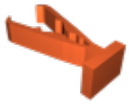

spring.stl

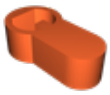

selector.stl

selector-pin.stl

top-cover.stl

bottom-cover.stl

storage-cover.stl

arranged.3mf

Other files

assembly-instructions.pdf

License

This work is licensed under a
Creative Commons (4.0 International License)

Attribution—Noncommercial—Share Alike

✖ | Sharing without ATTRIBUTION
✔ | Remix Culture allowed
✖ | Commercial Use
✖ | Free Cultural Works
✖ | Meets Open Definition