Levolor 1" Mini Blind Drum

Jacob

VIEW IN BROWSER

updated 28. 12. 2022 | published 28. 12. 2022

Summary

Mini blind drum designed specifically for Levelor mini blinds. Measures 1 1/2" in length, and has a 5/32" tilt rod hole.

0.54 hrs	1 pcs	0.16 mm	0.40 mm	PET	1 g	Creality Ender 3

Household > Other House Equipment

Tags: spool mini window rod tilt blind blinds drum levelor

This is a replacement drum designed for Levelor 1" mini blinds. The drum measures 1 1⁄2" in length, and has a 5/32" rectangular hole for the tilt rod. These imperial measurements are what I could find based on parts sellers, the file itself is designed in metric units.

Printing Instructions

- When importing into your slicer, it may warn you that some parts were designed in inches. This is not correct, I did **not** have the slicer adjust what it thought was in inches.

- I designed the part in the opposite orientation it should be printed in. I flipped the part after importing and enabled supports as shown:

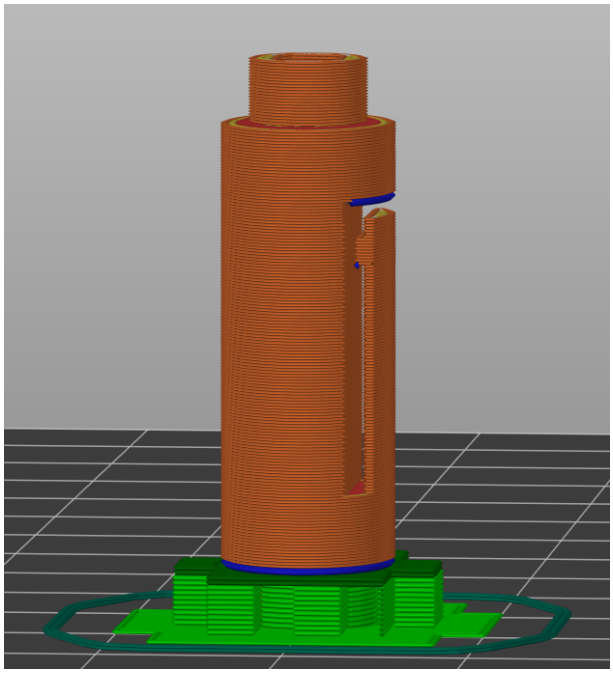

What is a drum?

If, like me, you didn't know the name for this part, the drum is the bit that slides on the tilt rod, which the two strings on the front/back of the blinds attach to to tilt the blinds open and closed. A diagram which explains which parts are which can be found here.

Model files

levelorminiblinddrum.3mf

---

levelorminiblinddrum.step

Print files

blind-clip-v11_33m_016mm_240c_petg_ender3v2_a.gcode

PET 0.40 mm 0.16 mm 0.54 hrs 1 g Creality Ender 3

This file may not be safe for printing, Klipper commands were replaced with standard gcode.

License

This work is licensed under a
Creative Commons (4.0 International License)

Attribution—Noncommercial—Share Alike

✖ | Sharing without ATTRIBUTION
✔ | Remix Culture allowed
✖ | Commercial Use
✖ | Free Cultural Works
✖ | Meets Open Definition